6.2 DVS02 system wiring schematics

5 DVS02 panel with vacuum generator

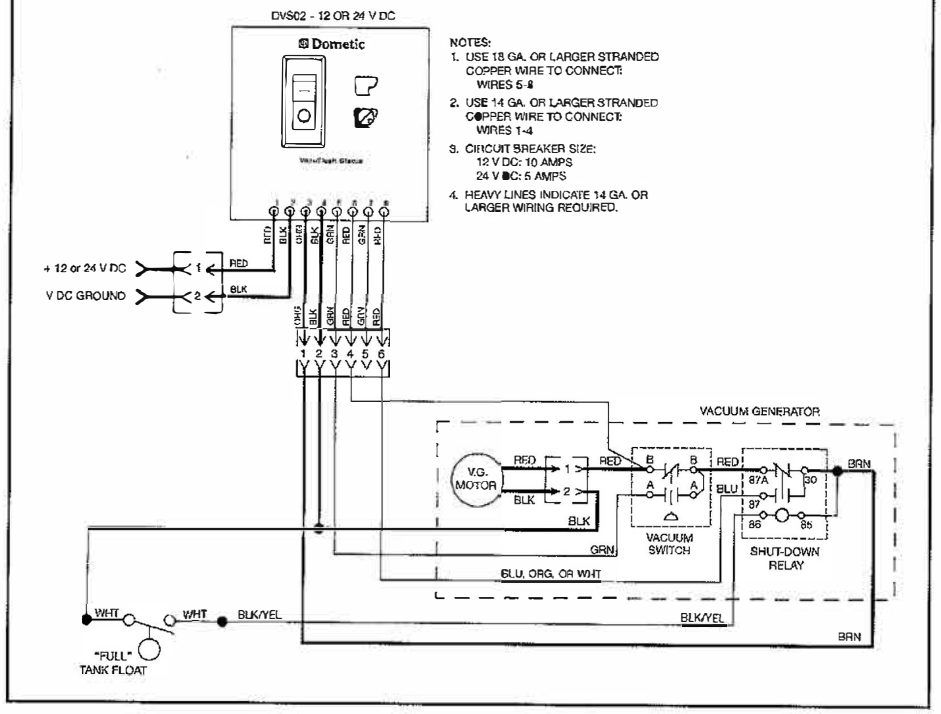

6 DVS02 panel with vacuum tank and vacuum pump

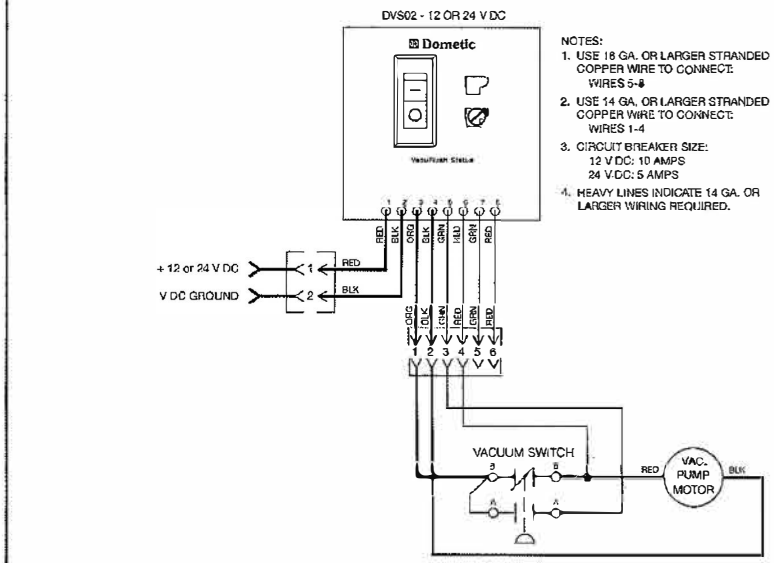
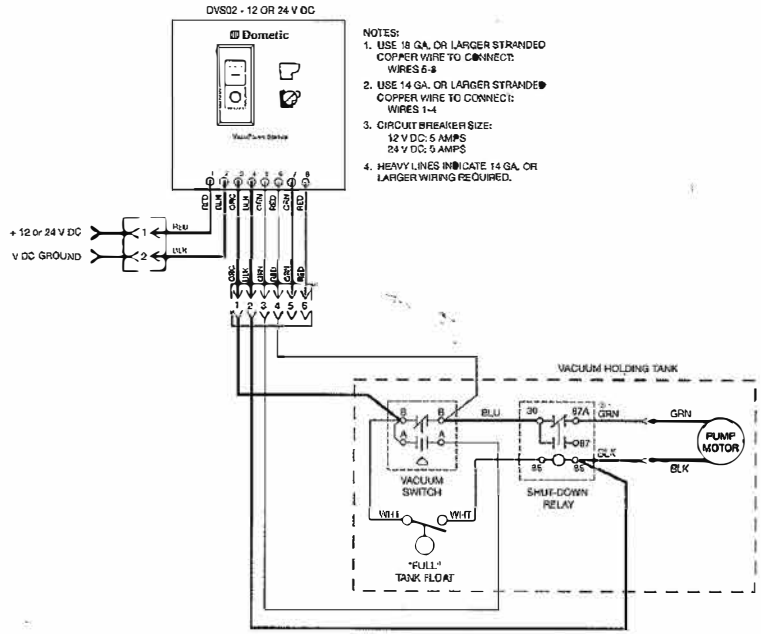
7 DVS02 panel with vacuum holding tank (VHT)